SKU: MKSP-D860440

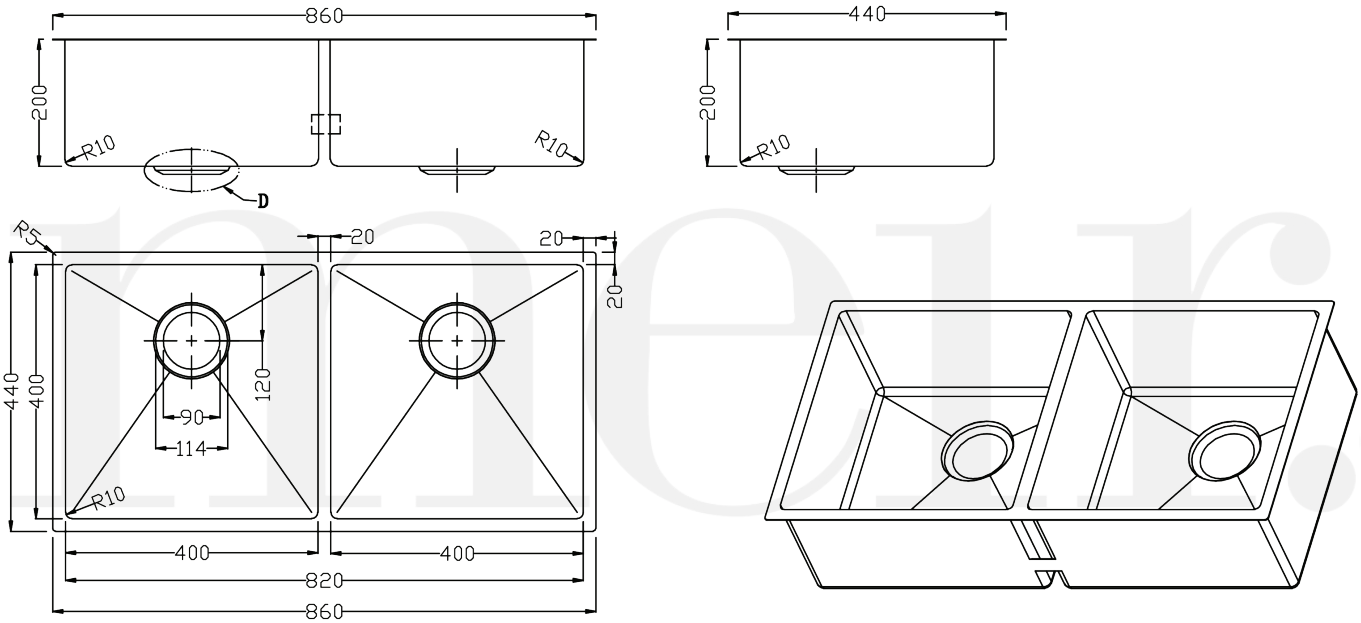

∅ Circle

meir.®

Designed with the assistance of leading Australian architects,
Meir crafts each piece from concept to production at the highest standards.
Copyright © Meir Australia Pty Ltd 2004 - 2018. www.meir.com.au